Contents

1 SAFETY

IMPORTANT INFORMATION

If this equipment is used in a manner not specified by the manufacturer, the protection provided by the equipment may be impaired.

Activities including installation, adjustments, putting into service, use, assembly, disassembly, and maintenance are required to be carried out by suitably trained personnel in accordance with applicable code of practice.

Throughout this manual, notes are used to highlight safety considerations. Labels may also be on or inside the equipment to provide specific precautions.

WARNING: Identifies information about practices or circumstances that can cause hazardous conditions, which may lead to personal injury or death, property damage, or economic loss.

SHOCK HAZARD: Labels may be on or inside the equipment to alert people that dangerous voltage may be present.

BURN HAZARD: Labels may be on or inside the equipment to alert people that surfaces may reach dangerous temperatures.

DANGER:

- High pressure/temperature media may discharge when the controller actuates the valve. Keep clear of the valve outlet.

WARNING:

- While operating the controller in manual mode, keep clear of all moving parts on the valve and actuator.
- While in AUTO mode, the controller may actuate the valve without warning. Keep clear of all moving parts on the valve and actuator.
- Do not unbolt base or remove the display module while power is applied to the device. Contact with exposed electrical components on the terminal board may cause injury or death.
- Do not operate the controller in environments where liquids may enter the enclosure. Liquid on the terminal board or display module may cause electrical faults which can cause electrocution and/or burns.
- Do not allow anyone under the influence of intoxicants or narcotics to operate the device. They are a hazard both to themselves and other employees and can cause severe personal injury or death to themselves or others.
- Incorrect service and repair could result in product or property damage or severe personal injury or death.
- These Warnings are as complete as possible but not all-inclusive. Mighty Instruments cannot know all conceivable service methods nor evaluate all potential hazards.
- Use of improper tools or improper use of right tools could result in personal injury or product or property damage.

2 USE

The MVCG2 (MVC Generation 2) is a highly integrated process controller which adds decentralized automation to distributed flow control devices.

The MVC ships factory programmed to automatically control an open/close actuator or operate a dual variable PID loop. Both programs operate on industry standard 4-20mA, discrete, and Modbus™ RTU control signals.

ASME Section I Power Actuated Relief Valve Configuration "PARV"

In the "PARV" configuration, the MVCG2 operates as a sophisticated digital pressure switch. While continuously monitoring process pressure through a high precision ADC, the MVCG2 automatically operates a power actuated relief valve according to the user's programmed set pressure and blow down criteria. This configuration can be used to control ASME and non-ASME capacity certified PARVs. The PARV configuration also includes provisions for DCS and manual override.

ASME Sec. I	Non- ASME Sec. I
• Set pressure cannot be changed from remote panel • Reseat pressure is automatically configured to 2% of set pressure without requiring user input • Remote panel functionality only allows switching between OPEN and AUTO mode • Remote panel cannot change Set pressure and reseat pressure.	• Reseat pressure can be set independently from set pressure • Remote panel functionality allows switching from OPEN, OFF, AUTO mode. • Remote panel functionality allows changing the set pressure and reseat pressure as well as other configuration parameters.

Basic Operation

In Auto mode, the MVCG2 reads the system pressure from a 4-20mA loop powered transducer. The pressure is scaled to the appropriate engineering unit and compared to the set and re-seat pressures, which are preprogramed at the factory. If the system pressure ever exceeds the set pressure, an overpressure condition is triggered. In an overpressure condition, MVCG2 commands the relief valve to the OPEN position until the system pressure falls below the re-seat pressure, at which point the MVCG2 resets the overpressure condition, and again commands the valve back to the CLOSED position.

Logic decision during AUTO mode

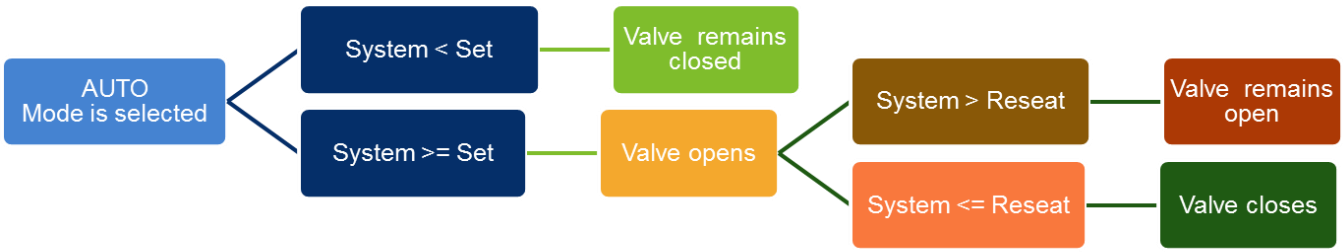

Logic decision when valve is in OPEN mode

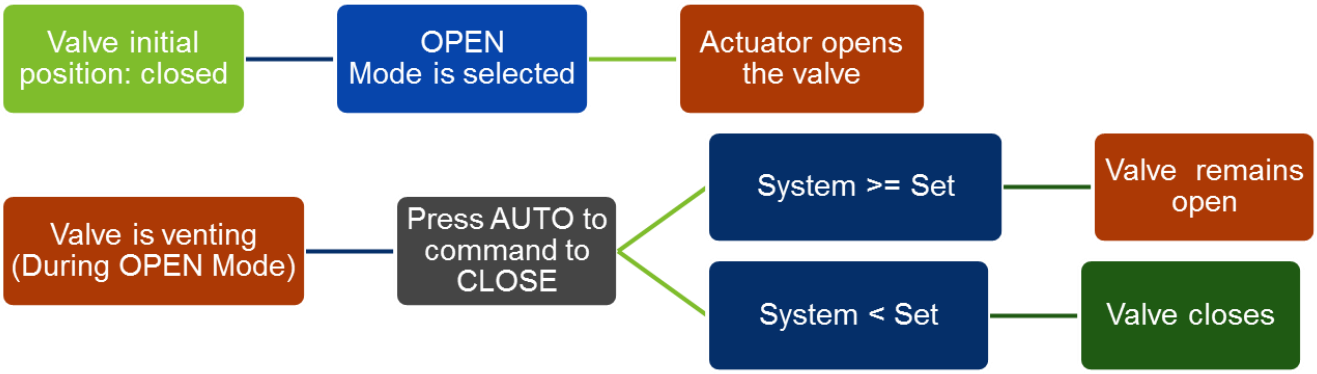

3 INSTALLATION

Installation location of the controller should be near the valve, but away from intense heat and vibration (refer to the below table for limitations). It is recommended that the MVCG2 is mounted on a flat rigid surface, but it may also be pole mounted with special provisions (contact Mighty Instruments for more information). The orientation of the controller is not critical, although care should be taken to ensure that the display is shielded from direct and constant sunlight.

STANDARD ENCLOSURE

The controller is secured in the desired mounting location with 4x M4 bolts. An optional DIN Rail bracket is available from Mighty Instruments. When using the standard enclosure, the controller must be installed inside a fire enclosure as specified on IEC-61010. This fire enclosure is mandatory unless using the optional IP rated enclosure.

OPTIONAL IP RATED ENCLOSURE

This optional enclosure provides additional protection to the controller when installed in harsher outdoor conditions.

STANDARD ENCLOSURE

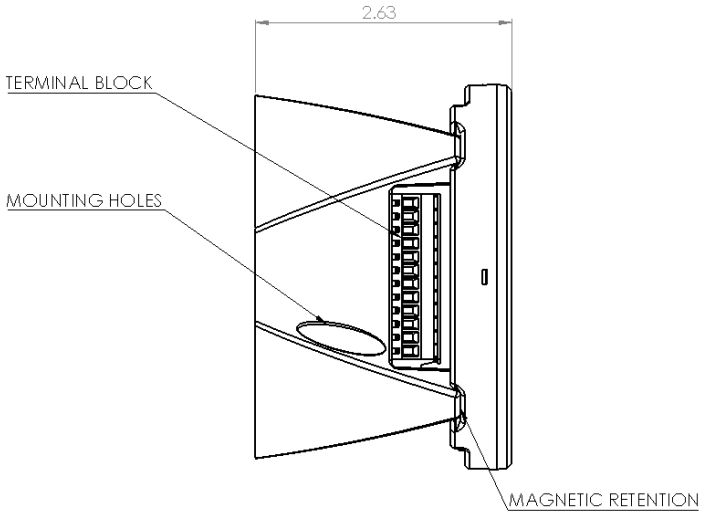

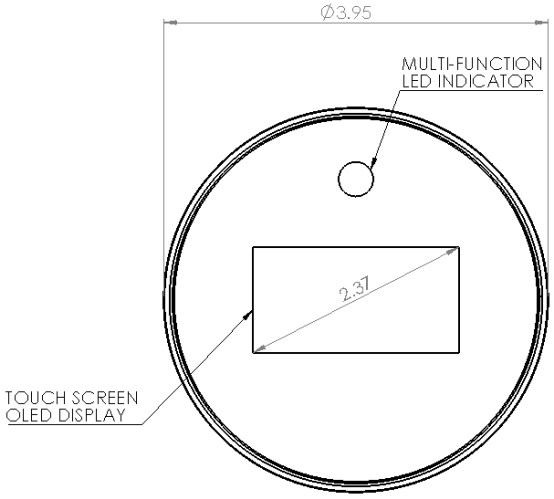

ALUMINUM ENCLOSURE

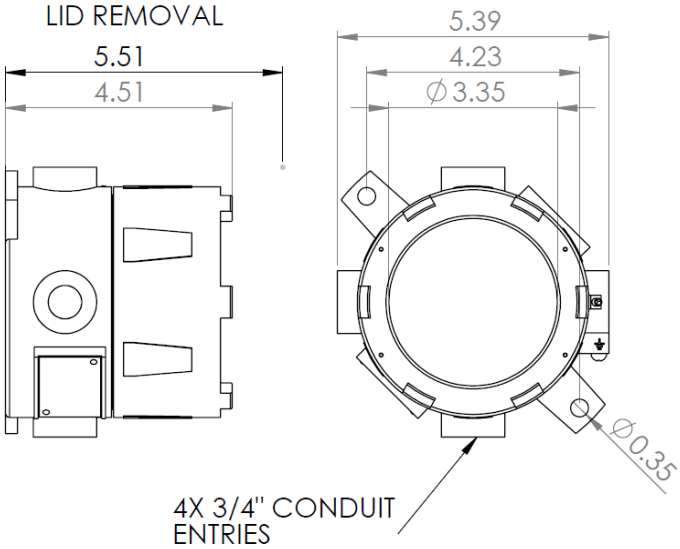

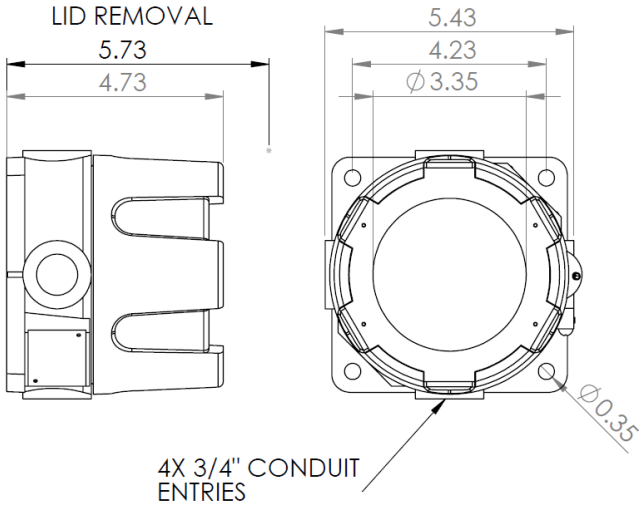

STAINLESS STEEL ENCLOSURE

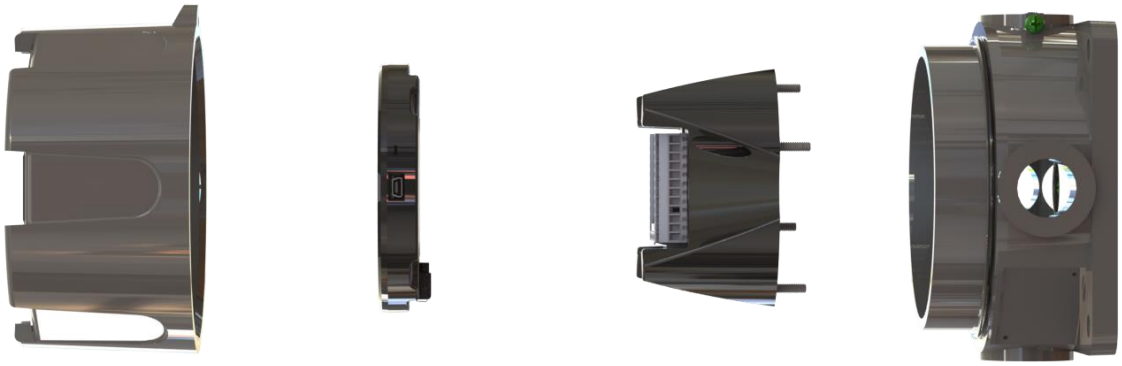

To access the wiring terminals, unthread and remove the front window cover. Verify that the power is OFF, and then pull the display module away from the terminal module. A SATA cable connects the display module to the terminal board. This may be unplugged during installation to improve access to the terminals. The power terminal is a fixed 5mm pitch block, while all others (Process, Remote, and DCS) are 3.5mm pluggable. This allows the installer to remove the terminals and wire externally, reducing the difficulty of the wiring process.

CAUTION!

Remove the display module with care. The SATA cable connecting the display to the terminal module is mechanically retained with a metal clip. The clip must be depressed before the cable can be removed. Do not pull on the SATA cable without disengaging the mechanical retention. Pull the connector straight up from the SATA connector body when removing.

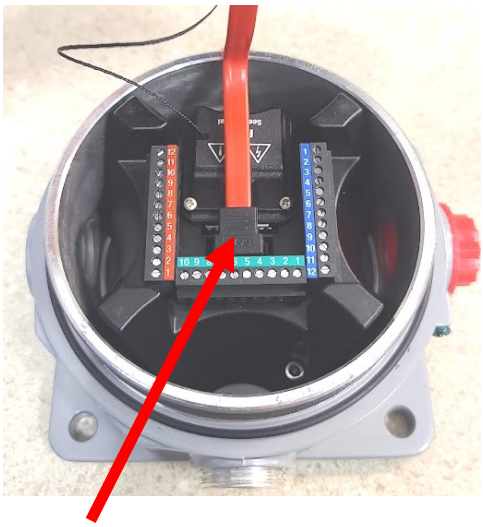

SATA Cable Connector

Remove the Remote (green) Terminal to gain easier access to the SATA retention clip. Do not attempt to disengage the SATA clip with a screwdriver or other tool.

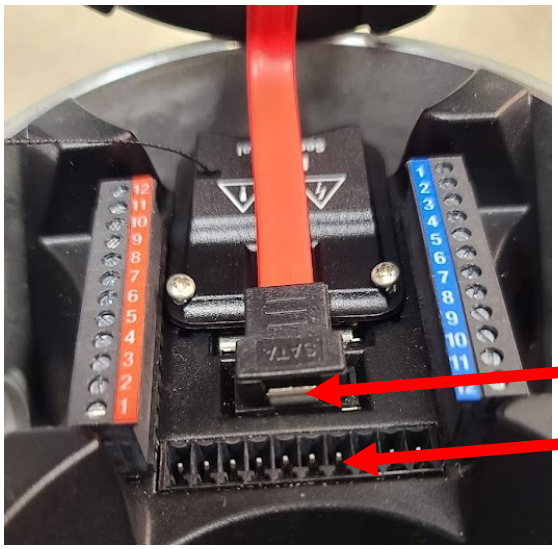

Retention Clip

Remove the Remote Terminal

Never twist the SATA cable or allow the display module to hang freely from the terminal module.

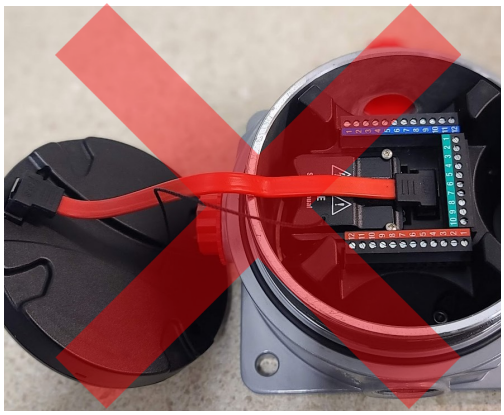

Do not hang!

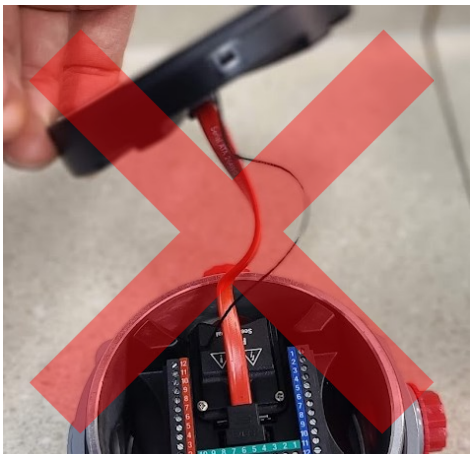

Do not twist!

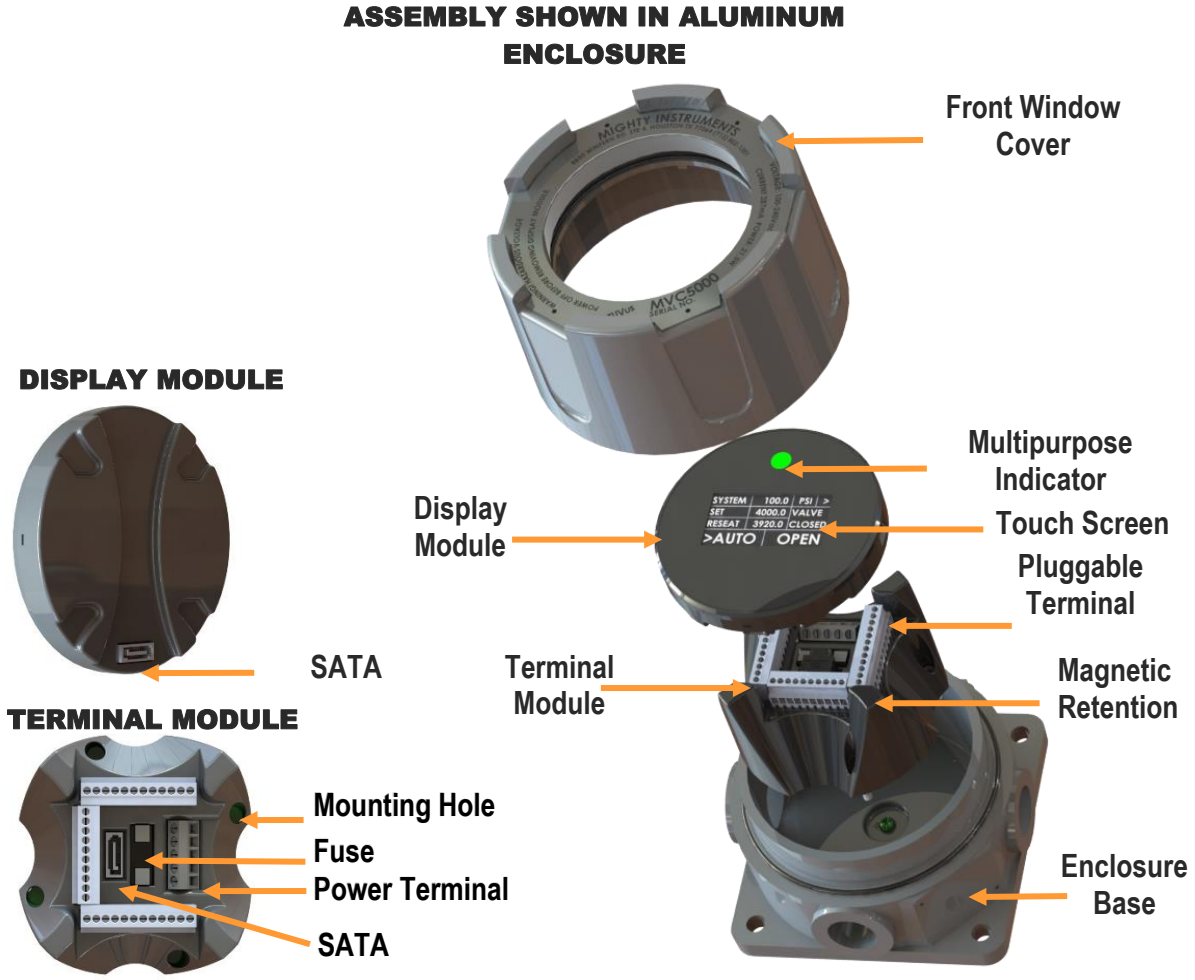

		STANDARD	OPTIONAL	
Parameter	**Description**	**Value**	**Value**	**Value**
Material	Housing material	PC+ABS Blend	Epoxy Coated Copper Free Aluminum	316 Stainless Steel
Temperature	Operating temperature range	-40°C to 80°C	-40°C to 80°C	-40°C to 80°C
Ingress Protection	Environmental rating	Not IP rated	NEMA 4X, IP66 / IP68	NEMA 4X, IP66 / IP68
Altitude		2,000 m	2,000 m	2,000 m

4 ELECTRICAL AND WIRING

Wiring must be in accordance with the provided wiring diagram and in accordance with local relevant standards and governing regulations. Refer to the following electrical specifications and example wiring diagram for guidance.

Warning - The MVC is a permanently connected device. A switch or circuit breaker must be provided to disconnect power from the device. This switch shall be in close proximity to the equipment and be clearly marked as the disconnection device for the equipment.

Shock Hazard - Power unit OFF before removing display module.

- High Voltage. Disconnect before servicing.
- A line breaker must be installed in junction panel.
- Isolate or disconnect if accessing under the fuse cover.

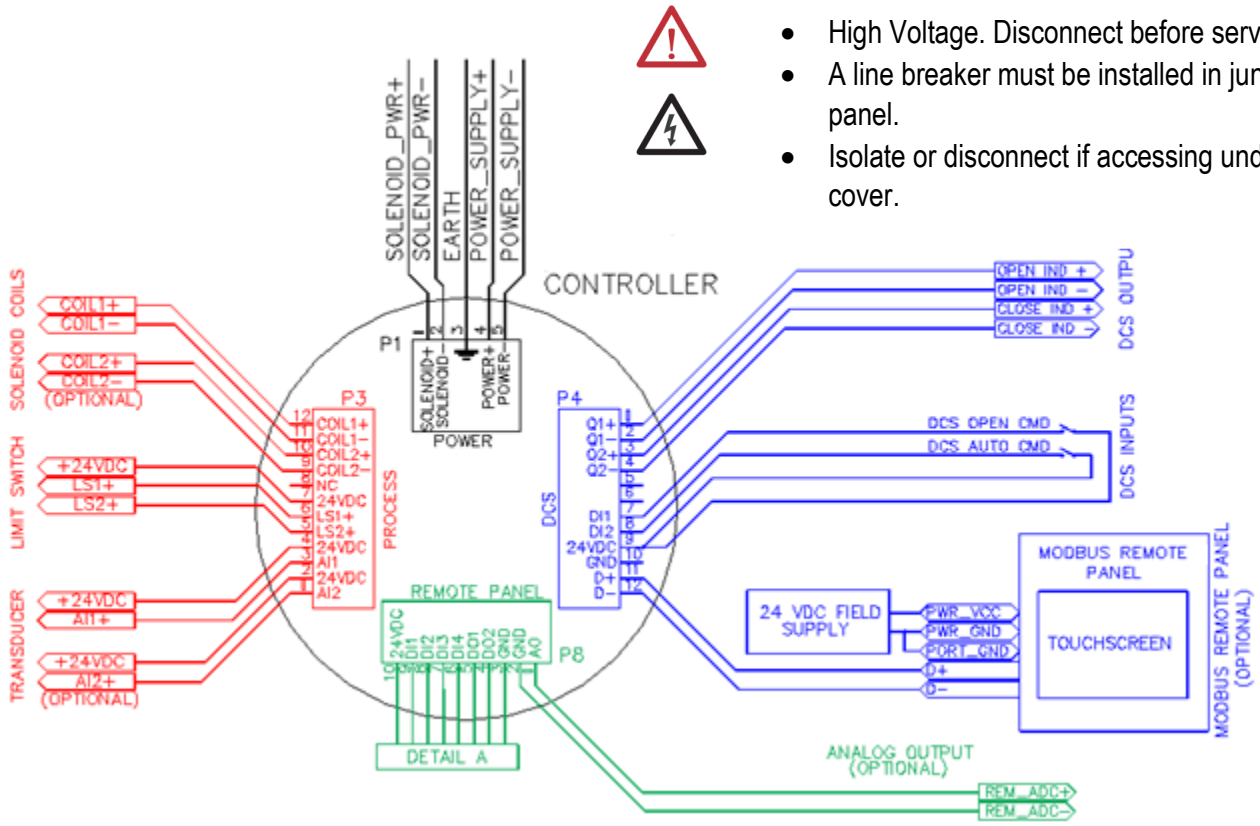

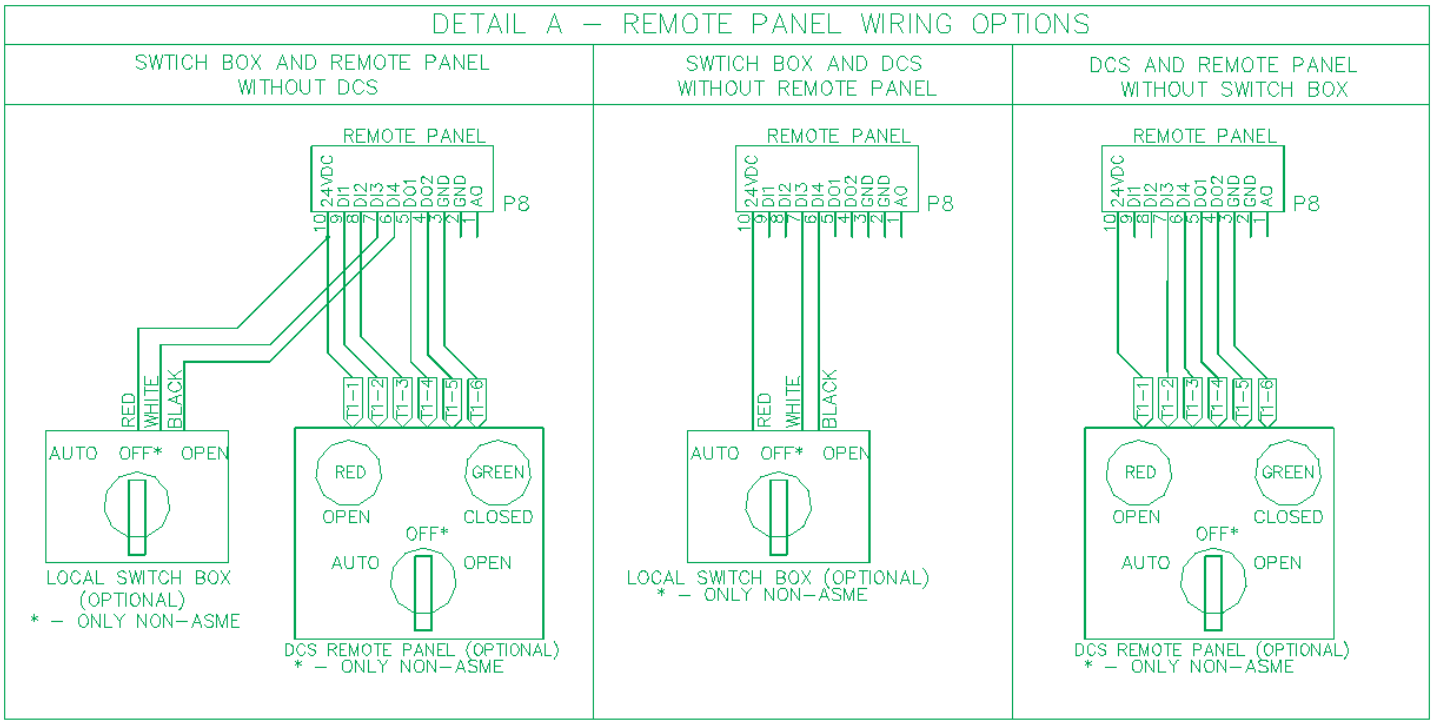

Wiring Notes

1) Supply: 100 - 240VAC 50/60Hz / 120 - 340VDC* (TÜV SÜD certification does not cover DC power.)
2) Q1,2 are dry contact outputs for DCS integration.
3) DI1,2,3,4 are isolated digital inputs for remote panel and switch box integration.
4) DO1 & 2 are wetted 24VDC digital outputs for remote panel integration.
5) Coil1 & 2 are dry contact relay outputs for solenoid control.
6) AI1 & AI2 are loop powered, non-isolated, 4-20mA analog inputs.
7) AO is a sourcing, non-isolated 4-20ma output.
8) All command inputs are momentary latching.
9) All indication outputs are maintained.
10) 20AWG 600V 105°C Rated recommended signal wire (field wiring)
11) 18AWG 600V 105°C Rated recommended power wire (field wiring)
12) If solenoid and MVCG2 power voltage are the same, the supplied jumper kit may be used to short Power terminals 1&4 and 2&5. Otherwise separate power feeds must be supplied to the power terminal.
13) The DCS remote panel and DCS connections may not be used simultaneously.

ELECTRICAL PARAMETERS

Parameter	Description	Value	Units
Input Voltage	Acceptable power supply voltage range.	100-240 VAC (50/60Hz) 120-340 VDC	Volts
Isolation	Power Supply Isolation	100MΩ / 500VDC / 25°C / 70% RH	MΩ Volts %RH
Surge Protection	EMC Immunity Details	Compliance to EN61000-4-2,3,4,5,6,8,11, EN55024, heavy industry level (surge L-N:1KV) criteria A, 500mA Fused	kV mA
Power	Maximum power consumed during operation.	12 W Max.	Watts

TERMINALS*

Parameter	Power Terminal	Control Terminals	Units
Wire Size	14 - 22 AWG (18 AWG recommended)	16 - 30 AWG (20AWG recommended)	AWG
Wire Voltage Rating	600	600	V
Voltage Rating	600	300	V_{RMS}
Current Rating	10	8	A
Pitch	7.5	3.5	mm
Temperature	105	105	°C
Screw Torque	3.0	2.0	lb-in

***USB Terminal is a service port and for factory use only.**

DISCRETE I/O

Parameter	Description	Value	Units
Input Quantity	Number of discrete inputs	8	ea.
Output Quantity	Number of discrete outputs	6	ea.
Input Types	Input hardware type	24VDC Isolated	
Output Types	Output hardware type	4 x Relay, 2 x 24VDC Sourcing	
Input Impedance	Nominal impedance to ground	4.7kΩ	kΩ

DCS and RELAY SPECIFICATIONS

Parameter	Description	Value	Units
Switching Voltage	Max. relay contact switching voltage	250VAC, 220VDC @ 100W	Volts
Switching Current	Max. relay contact switching current	0.3A	Amps
Contacts	Contact material	Silver alloy with Gold Plating	

ANALOG I/O

Parameter	Description	Value	Units
Input Quantity	Number of Analog Inputs	2	ea.
Output Quantity	Number of Analog Outputs	1	ea.
Input Dynamic Range	Maximum electrical signal range.	4mA - 20mA	mA
Output Dynamic Range	Maximum electrical signal range.	4mA - 20mA	mA
Input Resolution	Smallest measurable analog increment.	0.0015% of full scale	%
Output Resolution	Smallest producible analog increment.	0.0244% of full scale	%

NETWORK

Parameter	Description	Value
Virtual Layer	Communication protocol	Modbus™ RTU
Physical Layer	Wired physical connection	RS-485 (twisted pair, CAT5 or better)
Role	Device role	Master
Application	Network implementation usage	Remote Panel (point-to-point) Plug and play

REPLACEABLE FUSE

Parameter	Description	Value
Current	Rated current	1 A
Voltage	Rated Voltage	600 VAC / 400VDC
Size	Physical Size	5mm x 20mm
Fuse Type	Reaction time on current overload	Time-delay

KOREAN CLASS A EMC WARNING STATEMENT

EMC Registration done on this equipment for industrial use only.
It may cause interference would the product be used at home.

사용자안내문

사 용 자 안 내 문
이 기기는 업무용 환경에서 사용할 목적으로 적합성평가를 받은 기기로서 가정용 환경에서 사용하는 경우 전파간섭의 우려가 있습니다.

※ 사용자 안내문은 "업무용 방송통신기자재"에만 적용한다.

INTERNAL BLOCK DIAGRAM

The following simplified block diagram depicts the internal electronic functionality of the MVCG2.

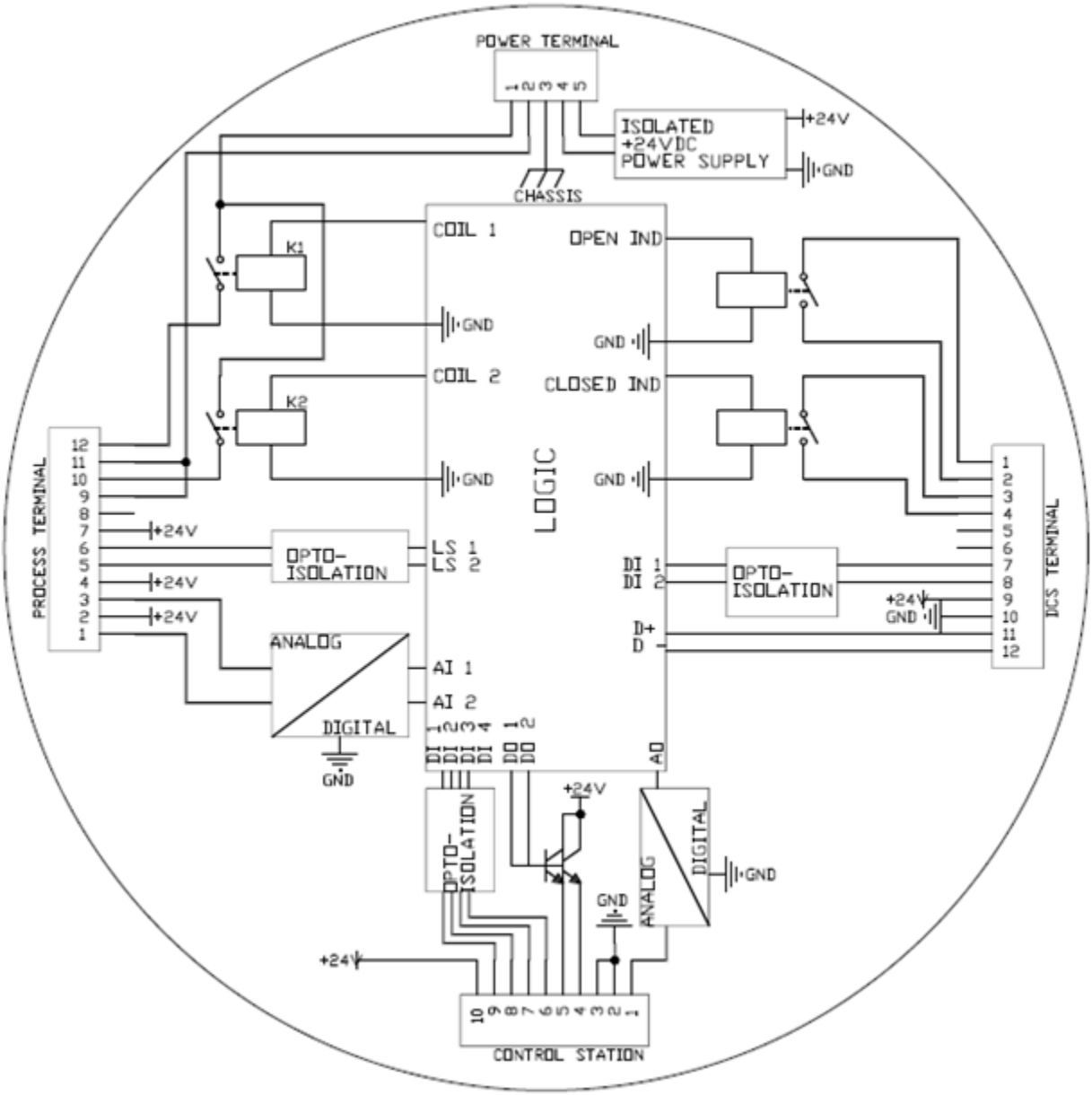

5 COMMAND STRUCTURE

ASME LOCAL PRIORITY

	SECOND COMMAND →	TOUCH SCREEN			SWITCH BOX			DCS			REMOTE PANEL		
INITIAL COMMAND ↓		AUTO BTN HOLD	OPEN BTN HOLD	NO BTN HOLD	AUTO	CENTER	OPEN	AUTO	OPEN	NO COMMAND	AUTO	CENTER	OPEN
TOUCH SCREEN	AUTO BTN HOLD	*Auto*	*Auto*	*Auto*	*Auto*	*Auto*	*Auto*	*Auto*	*Auto*	*Auto*	*Auto*	*Auto*	*Auto*
	OPEN BTN HOLD	*Open*	*Open*	*Open*	*Open*	*Open*	*Open*	*Open*	*Open*	*Open*	*Open*	*Open*	*Open*
	NO BTN HOLD	Auto	Open	Last	Auto	Last	Open	Auto	Open	Last	Auto	Last	Open
SWITCH BOX	AUTO	Auto	Open	*Auto*	N/A	N/A	N/A	*Auto*	*Auto*	*Auto*	*Auto*	*Auto*	*Auto*
	CENTER	Auto	Open	Last	N/A	N/A	N/A	Auto	Open	Last	Auto	Last	Open
	OPEN	Auto	Open	*Open*	N/A	N/A	N/A	*Open*	*Open*	*Open*	*Open*	*Open*	*Open*
DCS	AUTO	Auto	Open	*Auto*	Auto	*Auto*	Open	N/A	N/A	N/A	*Auto***	*Auto***	*Auto***
	OPEN	Auto	Open	*Open*	Auto	*Open*	Open	N/A	N/A	N/A	*Open***	*Open***	*Open***
	NO COMMAND	Auto	Open	Last	Auto	Last	Open	N/A	N/A	N/A	Auto**	Last**	Open**
REMOTE PANEL	AUTO	Auto	Open	*Auto*	Auto	*Auto*	Open	*Auto***	*Open***	Auto**	N/A	N/A	N/A
	CENTER	Auto	Open	Last	Auto	Last	Open	*Auto***	*Open***	Last**	N/A	N/A	N/A
	OPEN	Auto	Open	*Open*	Auto	*Open*	Open	*Auto***	*Open***	Open**	N/A	N/A	N/A

KEY	
Auto	Valve obeys the system set and reset pressures.
Open	Valve opens or remains open.
Close	Valve closes or remains closed.
Last	Valve stays in the same position.
N/A	These combinations are not possible.
Command	Initial command is controlling. Second command has lower hierarchy OR not holding second command

ASME REMOTE PRIORITY

	SECOND COMMAND →	TOUCH SCREEN			SWITCH BOX			DCS			REMOTE PANEL		
INITIAL COMMAND ↓		AUTO BTN HOLD	OPEN BTN HOLD	NO BTN HOLD	AUTO	CENTER	OPEN	AUTO	OPEN	NO COMMAND	AUTO	CENTER	OPEN
TOUCH SCREEN	AUTO BTN HOLD	Auto	Auto	Auto	*Auto*	*Auto*	*Auto*	Auto	Open	Auto	Auto	*Auto*	Open
	OPEN BTN HOLD	Open	Open	Open	*Open*	*Open*	*Open*	Auto	Open	*Open*	Auto	*Open*	Open
	NO BTN HOLD	Auto	Open	Last	Auto	Last	Open	Auto	Open	Last	Auto	Last	Open
SWITCH BOX	AUTO	Auto	Open	*Auto*	N/A	N/A	N/A	Auto	Open	*Auto*	Auto	*Auto*	Open
	CENTER	Auto	Open	Last	N/A	N/A	N/A	Auto	Open	Last	Auto	Last	Open
	OPEN	Auto	Open	*Open*	N/A	N/A	N/A	Auto	Open	*Open*	Auto	*Open*	Open
DCS	AUTO	Auto	Auto	Auto	*Auto*	*Auto*	*Auto*	N/A	N/A	N/A	*Auto***	*Auto***	*Auto***
	OPEN	Open	Open	Open	*Open*	*Open*	*Open*	N/A	N/A	N/A	*Open***	*Open***	*Open***
	NO COMMAND	Auto	Open	Last	Auto	Last	Open	N/A	N/A	N/A	Auto**	Last**	Open**
REMOTE PANEL	AUTO	*Auto*	*Auto*	*Auto*	*Auto*	*Auto*	*Auto*	*Auto***	*Open***	Auto**	N/A	N/A	N/A
	CENTER	Auto	Open	Last	Auto	Last	Open	*Auto***	*Open***	Last**	N/A	N/A	N/A
	OPEN	*Open*	*Open*	*Open*	*Open*	*Open*	*Open*	*Auto***	*Open***	Open**	N/A	N/A	N/A

KEY	
Auto	Valve obeys the system set and reset pressures.
Open	Valve opens or remains open.
Close	Valve closes or remains closed.
Last	Valve stays in the same position.
N/A	These combinations are not possible.
Command	Initial command is controlling. Second command has lower hierarchy OR not holding second command

6 STARTUP

Upon initial startup of the MVCG2, the unit will boot into a factory programmed default mode. Default settings are as follows. These settings are described in greater detail in section 5.

- Set Pressure and Blowdown are factory programmed according to the end-user's specification.
- Analog inputs and outputs are all factory calibrated.
- Analog Input 1 = Primary.
- Analog Output = Analog Input 1 Mirror
- Analog Heartbeat = 200 ms
- Limit Switch Debounce = 150 ms
- Network Sync Direction = OUT with respect to the MVC (Not Applicable on ASME models)
- Controller Mode = AUTO
- Actuator Function = Coil Maintained on Limit
- Interface = Sound: OFF, Open Color: RED, Close Color: GREEN, Backlight: WHITE
- Local/Remote = Local Primary

Shock Hazard Power unit OFF before removing display module.

7 SETTINGS

MAIN MENU

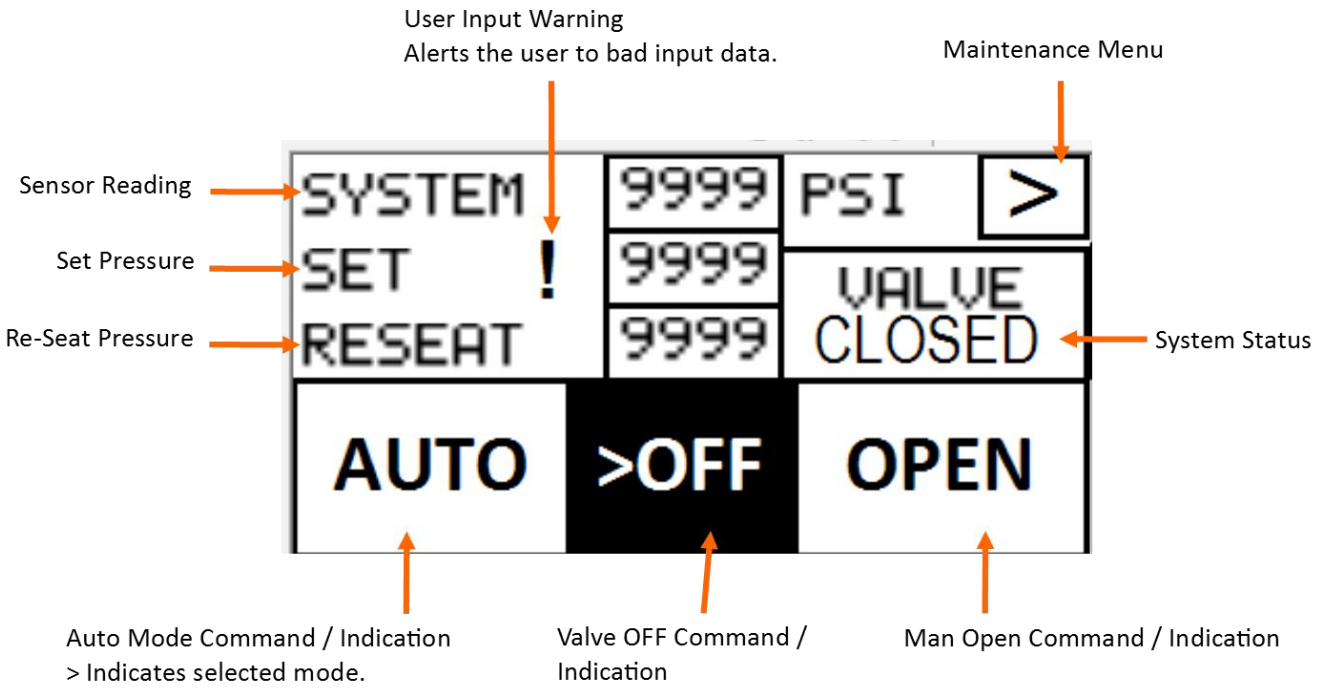

8 MENU MAP

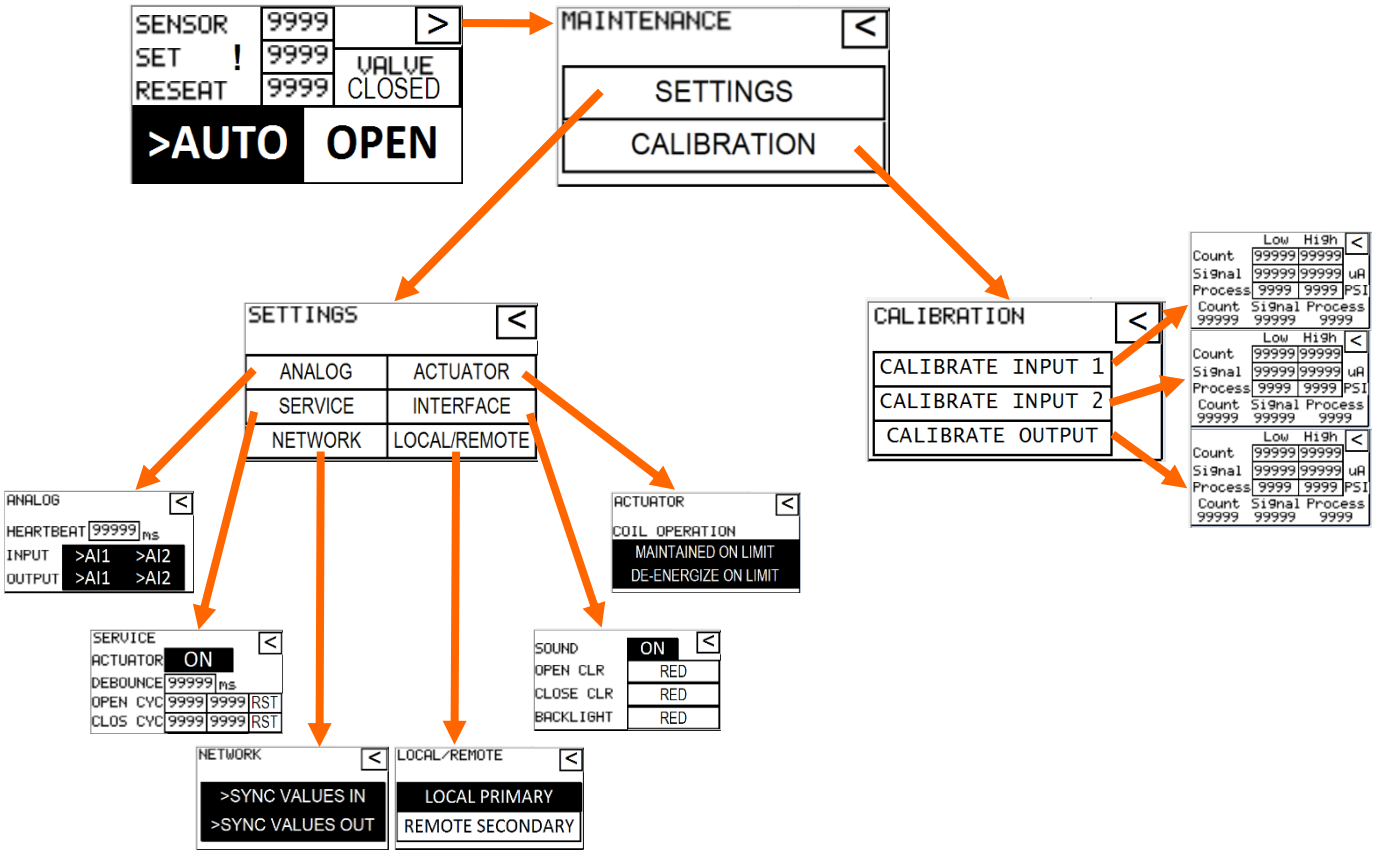
SENSOR 9999
SET ! 9999
RESEAT 9999
VALVE CLOSED
>AUTO
OPEN
MAINTENANCE
SETTINGS
CALIBRATION
SETTINGS
ANALOG
ACTUATOR
SERVICE
INTERFACE
NETWORK
LOCAL/REMOTE
CALIBRATION
CALIBRATE INPUT 1
CALIBRATE INPUT 2
CALIBRATE OUTPUT
Low High
Count 99999 99999
Signal 99999 99999 uA
Process 9999 9999 PSI
Count Signal Process
99999 99999 9999
ANALOG
HEARTBEAT 99999 ms
INPUT >AI1 >AI2
OUTPUT >AI1 >AI2
ACTUATOR
COIL OPERATION
MAINTAINED ON LIMIT
DE-ENERGIZE ON LIMIT
SERVICE
ACTUATOR ON
DEBOUNCE 99999 ms
OPEN CYC 9999 9999 RST
CLOS CYC 9999 9999 RST
SOUND ON
OPEN CLR RED
CLOSE CLR RED
BACKLIGHT RED
NETWORK
>SYNC VALUES IN
>SYNC VALUES OUT
LOCAL/REMOTE
LOCAL PRIMARY
REMOTE SECONDARY

MAINTENANCE MENU

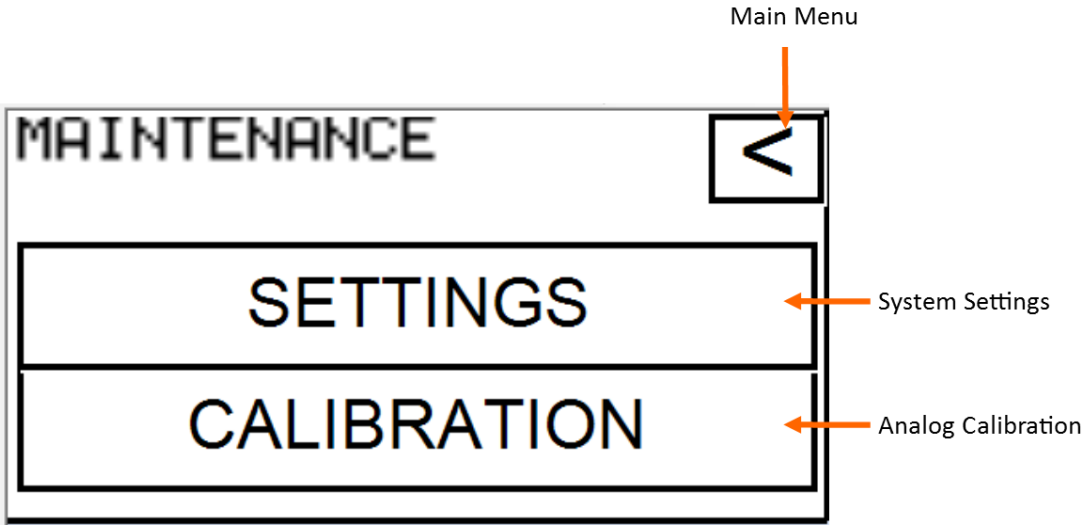

CALIBRATION MAIN MENU

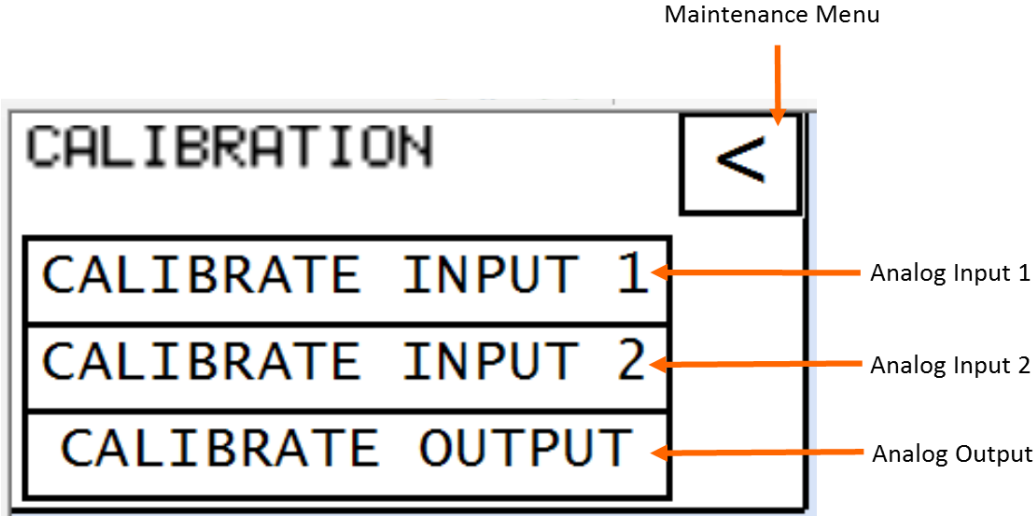

All calibration menus are locked with a 4 digit PIN. The default PIN is 1234.

CHANNEL CALIBRATION MENU

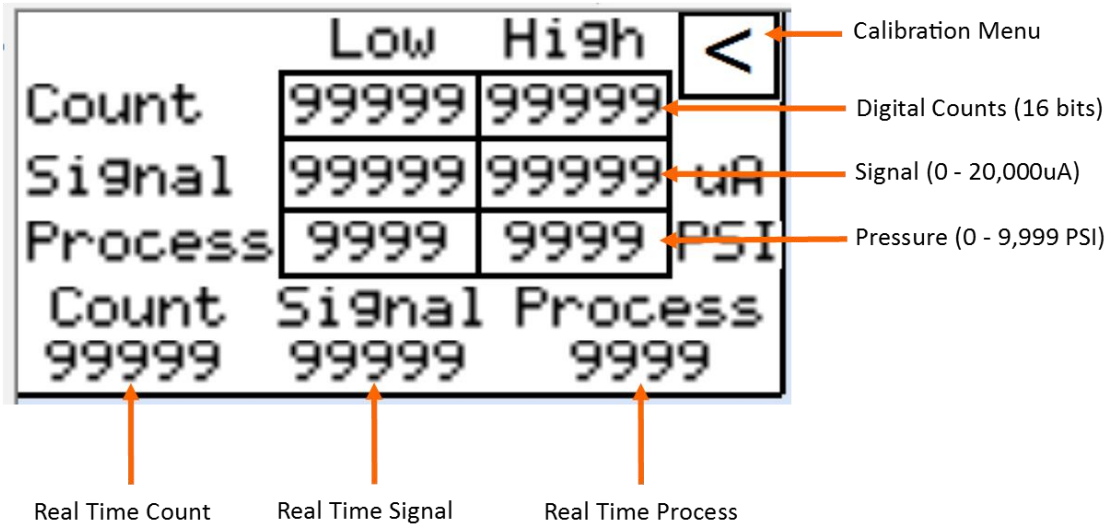

2 point Linear Interpolations: Counts to Signal, Signal to Process

- Input fields depict maximum possible values
- Count and Signal are factory calibrated. If either are modified, the unit must be recalibrated.
- The Process fields accept input for the range of the 4-20mA sensor.

ANALOG MENU

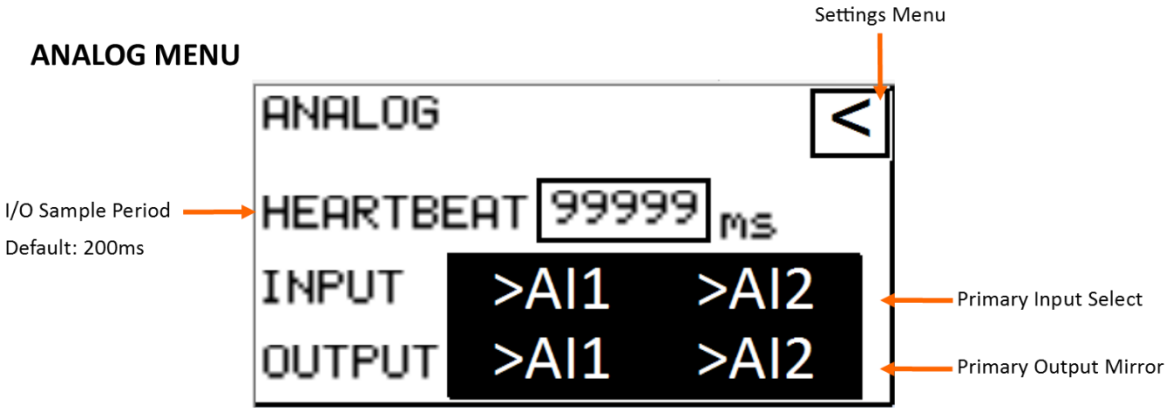

Heartbeat

Input/Output sampling period in ms. Heartbeat is used to filter the analog input variability so as not to crowd network traffic with unnecessary data.

Input

Select the primary input channel (1, 2, or both). Select both for redundant pressure monitoring.

Output

Select the primary analog input that the single output should mirror.

The Analog menu allows the user access to parameters which control aspects of the analog input and output channels in the MVC.

The heartbeat parameter is used to coarsely discretize the sampling and buffering of the input and output analog signal, respectively. The input signal is read and the output signal written once per period defined by the heartbeat. This is a simple technique used to limit unnecessary calculations and communication caused by quickly changing analog inputs. Usually,

these fast changes are caused by electromagnetic interference. The heartbeat should be set as high as tolerable with respect to overall system performance.
The MVC has 2 analog input channels (AI1 and AI2). The MVC may be configured to read data from either channel or both. If both channels are selected, the MVC will be in redundant mode and the higher of the 2 signals will trip the PARV AUTO functionality. In redundant mode, only the value of AI1 is displayed on the main menu.
Either analog input channel may be mirrored to the on-board 4-20mA analog output. This allows the local pressure transducer current loop to be repeated to the control room or other distributed control devices.

SERVICE MENU

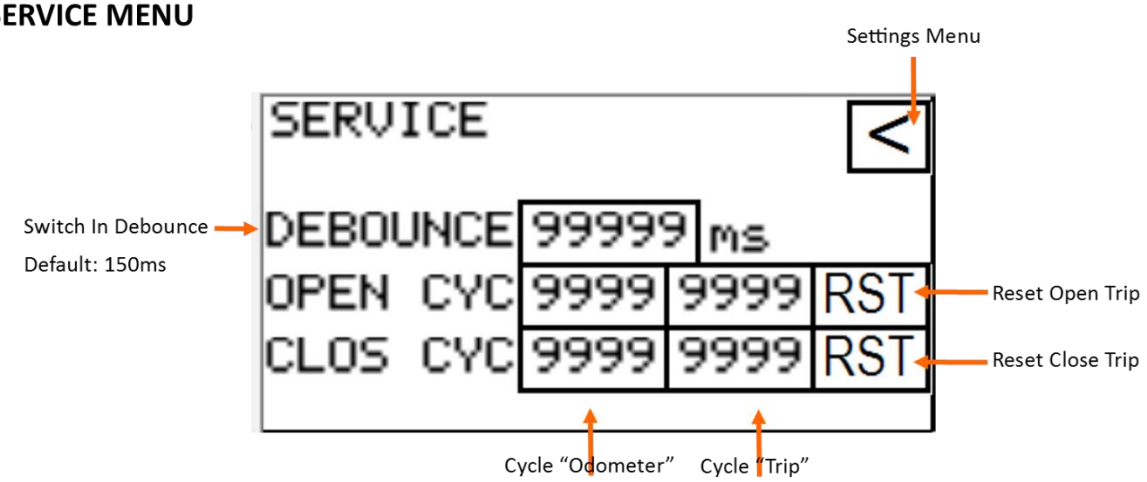

Debounce

Limit switch input wait time in ms. Debounce ignores fast switch "bounce" to record accurate cycle counts.

OPEN CYC / CLOS CYC

Open and close valve cycles recorded by the MVC5000. "Trip" may be reset; "Odometer" may not. "Odometer rolls over at 9999.

Debounce
Limit switch input wait time is ms. Debounce ignores fast switch "bounce" to record accurate cycle counts.
OPEN CYC / CLO CYC
Open and close valve cycles recorded by the MVC. "Trip" may be reset; "Odometer" may not. "Odometer" rolls over at 9999.

The Service menu allows the user access to parameters which control and monitor the limit switch cycle counter.
The limit switch cycle counter records the number of times the MVC receives open or closed position feedback from the limit switch. This number rolls over at 9999. Cycle count on the left accumulates in perpetuity, while the cycle count displayed on the right can be reset. Reset is initiated by pressing the RST button next to the value.

Debounce is a method of filtering the limit switch feedback signal. This value controls a timer which delays the data acquisition of an Open or Close event. When tripped, the internal contacts of a switch quickly snap together. This causes the contacts to "bounce" for a period of time resulting in multiple rising and falling edges in the signal. By delaying the acquisition of the limit switch signal into the MVC, the debounce timer ignores the bounce period and only records the true signal.

NETWORK MENU

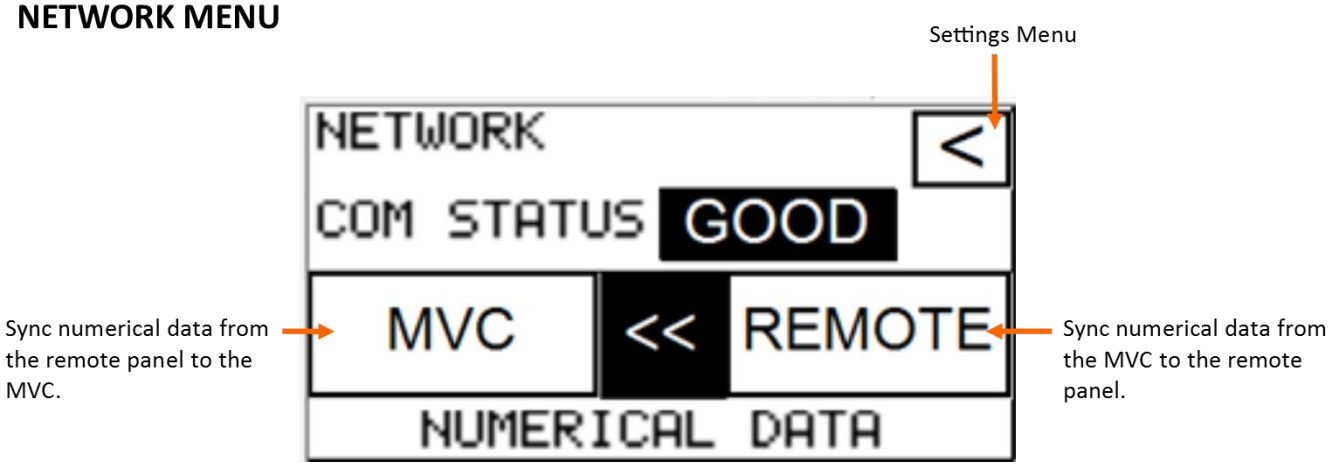

SYNC VALUES IN

Set Pressure and Blow Down are only adjustable from the remote interface. Values are synced from the remote control station to the MVC for display only.

SYNC VALUES OUT

Set Pressure and Blow Down are only adjustable from the local interface. Values are synced from the MVC to the remote interface for display only. 8

The network menu gives the user the ability to define the sync direction of numeric data to and from the Modbus Remote Panel when connected.

- Sync Values Out : Numeric values can only be set at the MVCG2, and those values are synced out to the Modbus™ Remote Panel.
- Sync Values In : Numeric values can only be set at the Remote Panel, and those values are continuously synced into the MVCG2.

LOCAL/REMOTE MENU

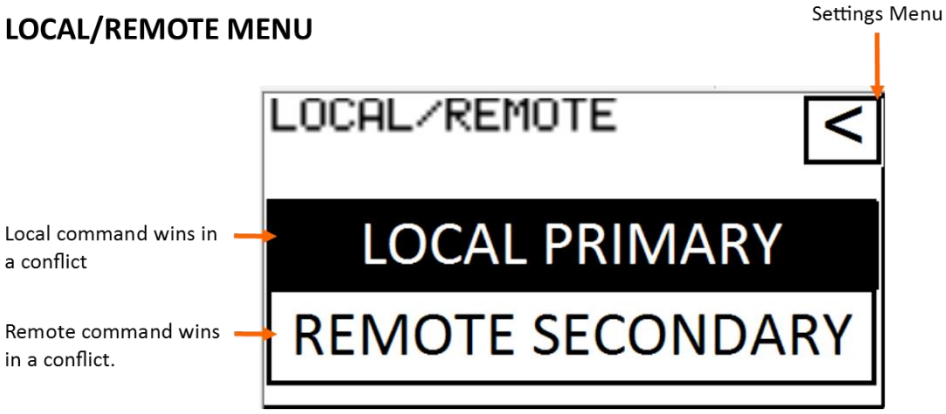

Local Commands

Local touchscreen interface and local switch

Remote Commands

Remote control station (touchscreen or panel switches) and DCS

The Local/Remote menu allows the user to select the mode which dictates the priority of external commands. External commands come from the DCS, Remote Panel, Switch Box, and Local Touch Screen. Each of these sources may issue commands at any time, and the MVC sees them all as peers. When a command conflict arises, however, the MVC must choose which source to prioritize. This is predefined according to the following hierarchy trees.

NON-ASME

Local Priority Mode

1) Local ON/OFF Button
2) Local Touchscreen
3) Local Switch Box
4) Remote DCS
5) Remote Panel

Remote Priority Mode

1) Local ON/OFF Button
2) Remote DCS
3) Remote Panel
4) Local Touchscreen
5) Local Switch Box

ASME

Local Priority Mode

1) Local Touchscreen
2) Local Switch Box
3) Remote DCS
4) Remote Panel

Remote Priority Mode

1) Remote DCS
2) Remote Panel
3) Local Touchscreen
4) Local Switch Box

INTERFACE MENU

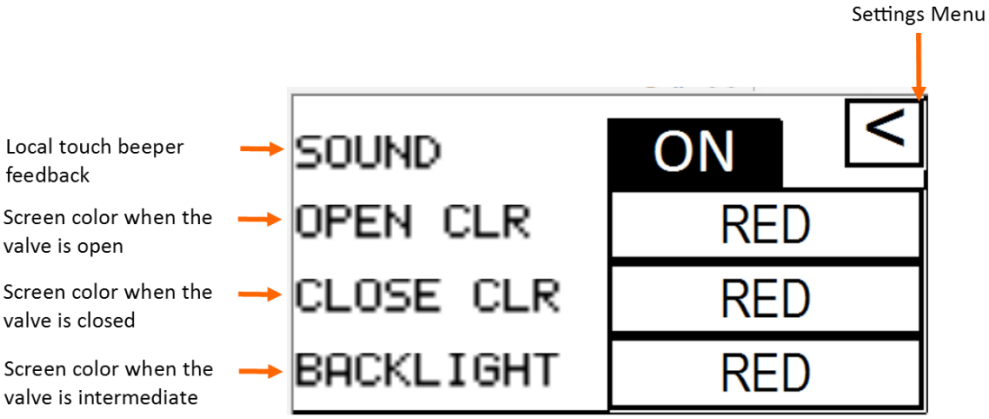

The Interface Menu contains configuration options for the local display and audible feedback. From this menu, the sound may be turned on and off. The user may also configure the display to illuminate in different colors corresponding to the position of the valve. Default colors are Red for Open and Green for Closed. The Backlight configuration defines the color of the touch screen when no limit switch input is present.

ACTUATOR MENU

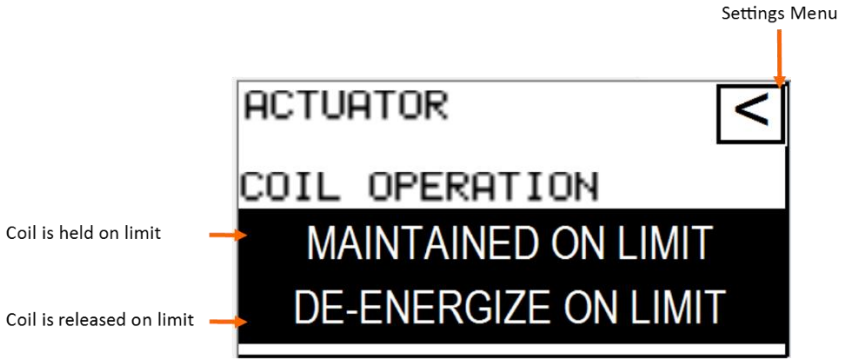

MAINTAINED ON LIMIT

The MVC5000 holds the solenoid coil energized after the valve moves as commanded.

DE-ENERGIZE ON LIMIT

The MVC5000 de-energizes the solenoid coil after the valve moves as commanded.

The Actuator menu allows the user to select the desired operation of the actuator. The user can select 2 options, MAINTAINED ON LIMIT or DE-ENERGIZE ON LIMIT. These 2 options define whether Coil 1 and Coil 2 remain energized once the valve reaches the desired location.

- MAINTAINED ON LIMIT: When this option is selected, the MVC will drive its output coil (1 or 2, corresponding to open or close commands) continuously, regardless of valve position. This is often used in spring return applications or applications that have a pneumatically actuated fail position.
- DE-ENERGIZE ON LIMIT: When this option is selected, the MVC will de-energize its output coil (1 or 2, corresponding to open or close commands) when the desired valve position is reached. This option is often used in double acting pneumatic actuators, where de-energizing the solenoid coil will not influence the actuator position. This option is also useful in electric actuators, where the contactor must be de-energized on the limit so that the motor does not over-torque.

9 CALIBRATION

The MVCG2 ships from the factory fully calibrated and programmed for each individual application. Periodic recalibration may be required to offset the effects of drift and/or process adjustments. Calibration should be done by a qualified technician. All calibration screens are locked with the default password: “1 2 3 4”

Analog Signal Calibration

The analog input and output channel calibrations in the MVC are fully defined by a 2-step, 2-point linear interpolation. In the case of the analog input channel, the signal is read in through a 16-bit ADC as a digital count, scaled to uA (micro amps), and finally processed as an engineering unit (PSIG, BAR, etc.). To define each step in the 2-step conversion, the MVC must be configured

Step 1a) Connect a loop calibrator to the transducer input and simulate a low current (typically 4000uA). Record the signal level and real-time counts in the low column.
Step 1b) Connect a loop calibrator to the transducer input and simulate a high current (typically 20000uA). Record the signal level and real-time counts in the high column.

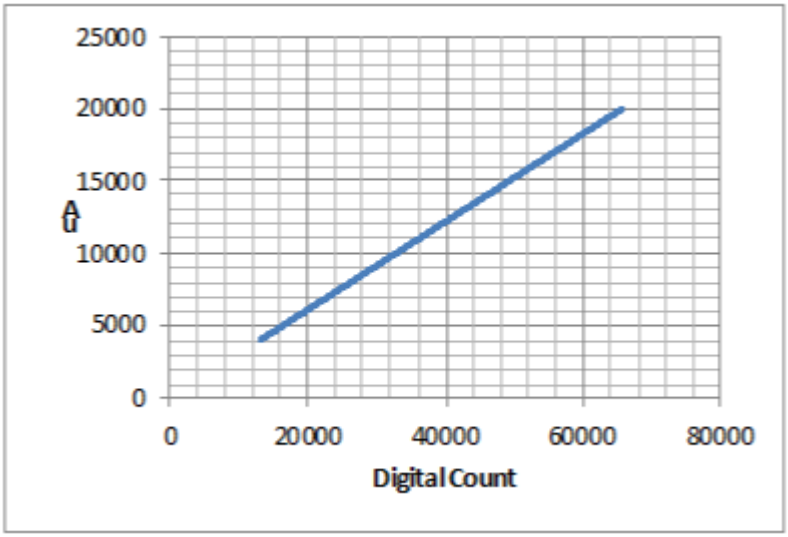

	Low	High
Count	13107	65535
Signal	4000	20000

Step 1a) Connect a loop calibrator to the transducer input and simulate a low current (typically 4000uA). Record the signal level and process value in the low column.
Step 1b) Connect a loop calibrator to the transducer input and simulate a high current (typically 20000uA). Record the signal level and process value in the high column.

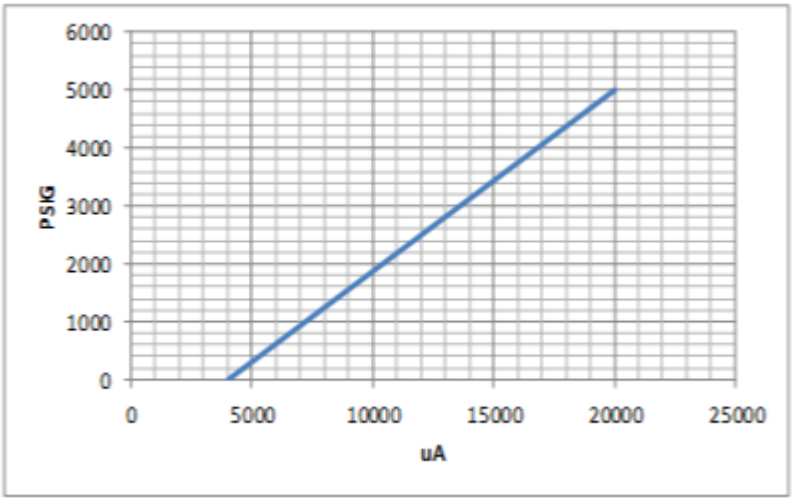

Step 2

	Low	High
Signal	4000	20000
Process	0	5000

10 ACCESSORIES

The MVC may be combined with several accessories to add functionality and otherwise supplement the MVC's standard features.

DCS Remote Panel

The MVC DCS Remote Panel is a panel mounted Remote Panel intended to be mounted remotely in a plant control room. This Remote Panel consists of 2 valve position indicating lamps and a manual "AUTO/OPEN" switch. The Non-ASME version of this panel also features an "OFF" selection which is used to disable the actuator solenoid coil(s). Wire the DCS control panel to the MVC as shown in the supplied wiring diagram.

Modbus Remote Panel

The MVC Modbus Remote Panel is a panel mounted touch screen Remote Panel intended to be mounted remotely in a plant control room. This Remote Panel mirrors the MVC local display so that all parameters can be monitored and configured remotely. The Non-ASME version of this panel also features an "OFF" selection which is used to disable the actuator solenoid coil(s). Communication between the MVC and Modbus Remote Panel is via RS-422/485 Modbus RTU. Wire the Modbus control panel to the MVC as shown in the supplied wiring diagram. The Remote Panel's standard RJ45 connector makes CAT 5-7 cable a reasonable choice for this connection. Custom cables are available from Mighty Instruments. If standard CAT 5-7 cable is used, care should be taken to route Tx and Rx signals along twisted pairs to minimize crosstalk and maximize overall performance. Use the suggested pin-to-pin configuration, below:

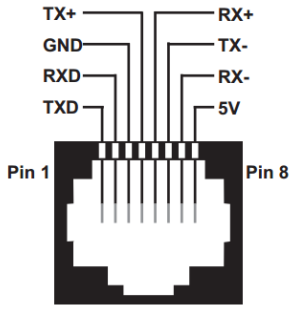

CAT6 EXAMPLE

RJ45 PIN	1	2	3	4	5	6	7	8
COLOR				BLU	GRN	BLU/W	GRN/W	
FUNCTION	NC	NC	NC	Tx+/D+	Rx+/D+	Tx-/D-	Rx-/D-	NC

Switch Box

The MVC optional NEMA 4X switch box allows a user to command the controller into AUTO or OPEN mode via a local 3 position-maintained switch. The center switch position allows for the absence of local command so that the DCS can take control of the device. Each switch box connects to one of the MVC's 4 integral conduit hubs. The switch box contains another conduit entry on the opposite end to allow the use of local operators without losing access to wire entry points. Wire the switch box as detailed in the provided wiring diagram.

11 GEN 2 SUMMARY

MVCG2 (The next generation MVC controller) builds on the success of Generation 1 and improves in several key areas. Every new feature is motivated by field feedback and incremental improvement objectives. Improvements and changes from Gen 1 to Gen 2 are as follows:

- Generation 2 is fully backward compatible with Generation 1
- Extended Temperature Range: From -20C/52°C to -40/80°C
- Wider Input Voltage Range.
- Higher Power Relays: 60W to 100W
- Improved Wiring Access: Terminals raised 1.25”
- Short-Circuit Protection
- IBR and ASME Sec. 1 Compliance
- Smaller IP Rated Enclosure: 6” to 5”
- Segregated Remote Panel and DCS Inputs (Remote panel and DCS may now operate simultaneously).
- Units and ASME type are now touchscreen configurable
- Improved Delivery
- Integral Actuator Mounting Option. Valve position sensor built in to controller.
- Universal Solenoid Voltage. Configurable 24VDC solenoid output.

A-T Controls, Inc. • 9955 International Boulevard, Cincinnati, OH 45246 • Phone: (513) 530-5175 • Fax: (513) 247-5462 • www.atcontrols.com